CLEAR VIEW

4K ULTRAHD

HD4444K
Full HD HDMI to DVB-T modulator with 4K Pass Through

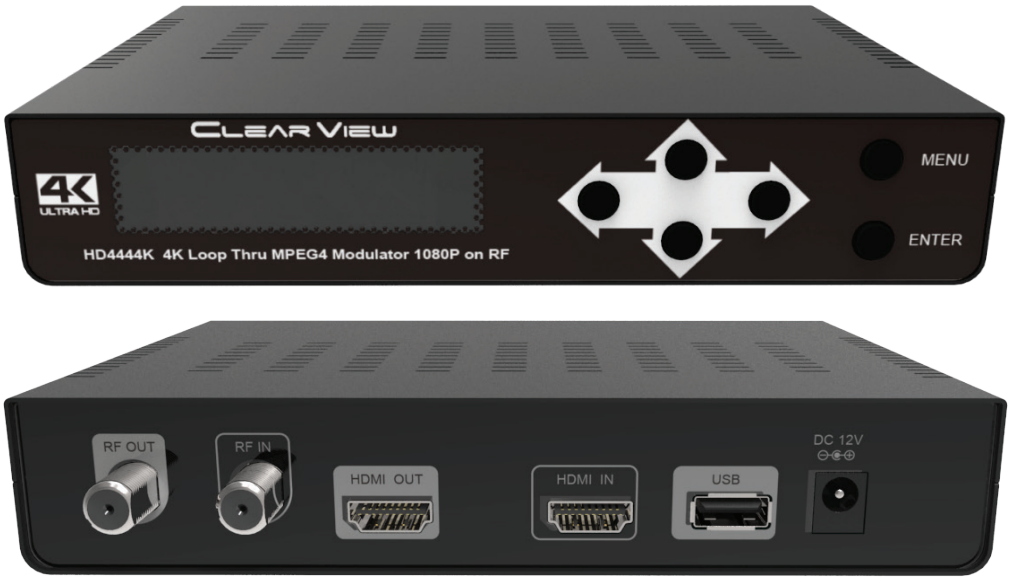

USER GUIDE

CLEAR VIEW

TABLE OF CONTENT

1 GENERAL 2
1.1 Description 2
1.2 Specifications 3
2 INSTALLATION 5
2.1 Power Supply 5
2.1.1 Operation via external power supply 5
2.2 Connection 5
2.2.1 Connection diagram examples 5
2.3 Navigation and edition of values. 6
3 OPERATING INSTRUCTIONS 6
3.1 Description of controls and components 6
3.2 Starting 7
3.3 Configuration menu 8
3.4 Menu Tree 9

CLEAR VIEW

HOME DIGITAL MODULATOR

1 GENERAL

1.1 Description

The HD4444K module able to generate a signal in **DVB-T** format (Digital Terrestrial Television) from HDMI input.

HD4444K is H264 encoding, DVB-T modulation integrated device to convert 4K Pass FHD HDMI signal to DVB-T RF out. It has equipped with one channel HDMI input, one HDMI out(4K pass-though) and one DVB-T RF out.

The HD4444K module adjusts the compression rate to the available bandwidth, using the modulation **DVB-T** parameters.

1.2 Specifications

Source input :	
• Input Channel	1
• Video	HDMI
• Video System	480i/p, 576i/p, 720p, 1080i/p, 4K(3840x2160 or 4096x2160)
• Audio system	HDMI

Compression :	
• Video	H.264 Baseline Profile Level4.0
• Video Resolution	1080p 25 / 30 Max
• Video Bit rate	12Mbps MAX
• Audio	MPEG-2 / AAC
• Audio Bit rate	192 Kbit/S
• DVB insertion tables	SDT, NIT
• Editable field	Service Name , Network Name , Provider Name , TS ID , Network ID , Original NET ID ,LCN , NIT Version , Private Data ,Country

RF Output	
• Type	1 Multiplex DVBT with a digital TV service
• Frequency	177 – 858 MHz
• MER	30 dB Min.
• Output level	100 dBuV
• RF Level Adj	0 dB ~ -30dB
• Attenuation step	1dB per step

Connections	
• HDMI IN	HDMI IN
• HDMI OUT	4K PASS THROUGH
• RF Output	1 DVBT RF output with type F female, 75 ohm
• RF Input	RF Combiner

Modulation	Standard	DVBT (ETSI EN 300 744)
	Constellation	QPSK, 16QAM, 64QAM
	Guard Interval	1/4, 1/8, 1/16, 1/32
	Code Rate	1/2, 2/3, 3/4, 5/6, 7/8
	FFT Carriers Mode	2K, 8K
	Bandwidth	6MHz, 7MHz, 8MHz, 7-8MHz
Power Supply	12V ADAPTOR	
Display	LCD panel @ 2 x 16 characters (on front panel).	
Configuration	6 Local keys on front panel : ・ENTER Key : Select parameter, or menu ・ L / R Keys : Move menu, or characters ・Up / down : Select value of the figure, or field ・MENU keys : Return to start menu	
Environmental for operating	Temperature range	5°C- 40°C
	Relative Humidity	80% @ 30°C

*Specifications subject to change without prior notice.

2 INSTALLATION

2.1 Power Supply

To start using it, connect the external power supply to the 100~230V mains and the 12V to the instrument input.

Once connected to power, the device turns on and it takes about 37 seconds to be operational. Then the message **" Keyboard Locked"** appears on the display.

2.1.1 Operation via external power supply

Use only the external power adapter supplied with the instrument.

2.2 Connection

2.2.1 Connection diagram examples

- **CONNECTION DIAGRAM FOR ONE MODULE**

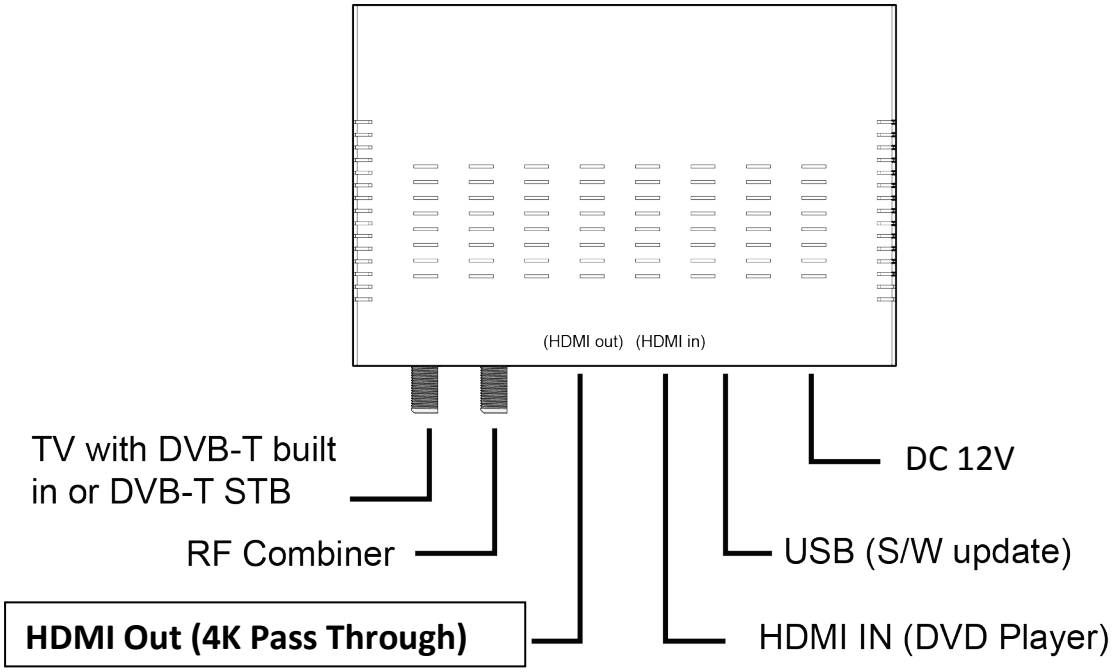

ATTENTION!
FOR THIS CONFIGURATION YOU SHOULD USE OUTPUT FREQUENCIES DIFFERENT FROM THE ONES THAT YOUR TV IS CURRENTLY USING.

2.3 Navigation and edition of values.

The instrument is configured through its 6 keys and front panel display. In general, it is not necessary to configure the instrument to generate a **DVB-T** signal compatible with any digital terrestrial television receiver.

Select parameter / menu.

Move Right / Left between menu / characters.

Increase / Decrease value of the figure / field.

Return to start menu

3 OPERATING INSTRUCTIONS

3.1 Description of controls and components

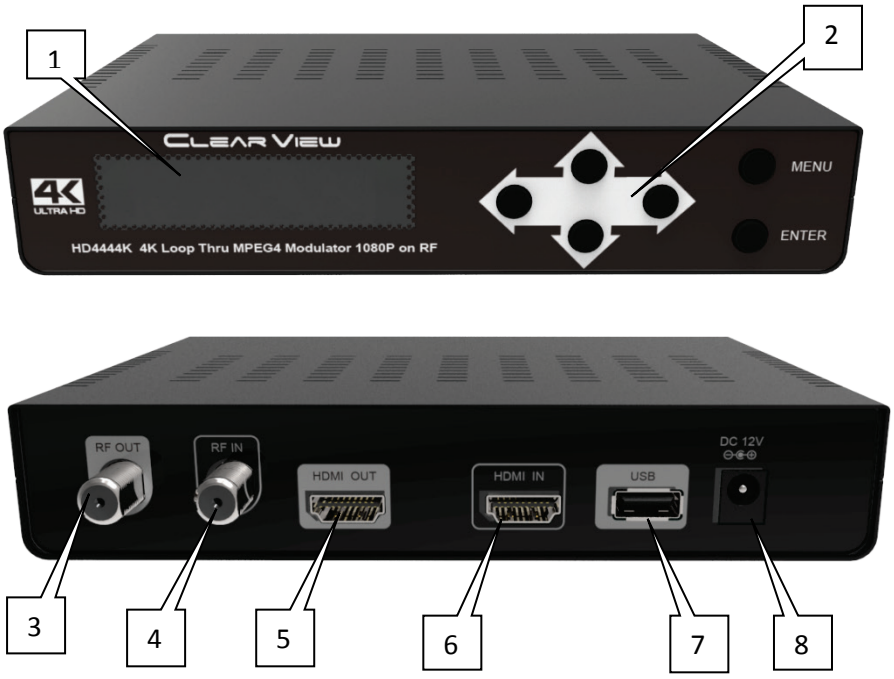

1.- Display (LCD).

2.- Menu navigation keys.

3.- TV COFDM Output.

4.- RF Combiner

5.- 4K Pass Through

6.- HDMI IN

7.- USB: S/W update

8.- Input 12V DC power adapter (included).

3.2 Starting

1.- After connecting the power to the instrument, the message **“Initial….” “Please Wait...”** appears for 37 seconds.

2.- Then the message **“Keyboard Locked”** appears. To access to the configuration menus the user has to enter a password.

3.- Press **ENTER**.

4.- The field **“Enter Password”** appears. Enter the access code. (By default: 0000).

5.- Press **ENTER**.

6.- The field “Network Setting” appears, this is the first option on the configuration menu.

3.3 Configuration menu

1.- **Frequency:** It sets the frequency value for the output signal. **Important:** Check that the selected frequency is not already being used by a current television distribution channel.

2.- **RF Level Adj:** It adjusts the power level of the output signal, in dB units. Its range from 0 to -30 dB.

3.- **Bandwidth:** Channel bandwidth. (6, 7 , 8 , 7 - 8 MHz).

4.- **FFT Carriers:** Signal transmission mode. (2K, 8K).

5.- **Guard Interval:** Safety signal margin. (1/4, 1/8, 1/16, 1/32).

6.- **Constellation:** Constellation type used to transmit signal(QPSK,16QAM, 64QAM).

7.- **Code Rate:** Available values are (1/2, 2/3, 3/4, 5/6, 7/8).

8.- **Video Output:** Video encode. H.264 of the video output.

9.- **Audio Output:** Audio encode. Selection between MPEG-2 and AAC

10.- **Video Bitrate:** Select video bit rate(2,4,6,8,10,12 Mbit/S).

11.- **Audio Bitrate:** Bitrate to encode the audio. Available values are between 192 kbit/s.

12.- **Service Name:** Service name edit.

13.- **Provider Name:** Service provider name edit.

14.- **Service ID:** Service ID edit.

15.- **LCN**: It specifies the index for the service sorting on the digital terrestrial television receiver. Values are between 1 and 999.

16.- **Country:** Country selection for LCN sorting.

17.- **Original Net ID:** Identifier of the original network. It is the number to identify the network from where the signal comes.

18.- **Network ID:** It is the number that identifies the network where the signal is distributed.

19.- **Network Name:** Network name edit.

20.- **TS ID:** It is the transport stream identifier.

21.- **NIT Version:** Network Information Table version. In some countries it should match with other tables version received from the receiver.

22.- **Information:** It shows the firmware version installed in the instrument. This option is not editable.

23.- **Apply Setting:** It saves the current configuration on the non-volatile memory of the instrument.

24.- **New Password:** It allows the user to change to a new password to access the menu.

25.- **Load Default:** It returns to the default values.

3.4 Menu Tree

MAIN		Layer 1	Layer 2	Menu Options
Network Setting	1	Country	Other	Australia,Croatia,Czech,Denmark,Estonia,Finland,France,Ireland, Italy, Latvia, Netherlands, New Zealand, Norway,Poland, Portugal, Slovak, Sweden, UK, Other
	2	Original Net ID	8350	
	3	Network ID	13057	
	4	Network Name	Private Network	
	5	TS ID	128	
	6	NIT Version	28	
CH & Enc Setting	1	Service Name	CH1	
	2	Provider Name	CH1	
	3	Service ID	1	
	4	LCN	1	1~999
	5	Video output	H.264	
	6	Audio Output	MPEG-2	AAC/MPEG-2
	7	Video Bitrate	12 Mbit	2,4,6,8,10,12 Mbit
	8	Audio Bitrate	192 Kbit	
RF Setting	1	Frequency	CH24 533.00MHz	177~857MHz
	2	Constellation	64QAM	QPSK,16QAM,64QAM
	3	Guard Interval	1/32	1/4,1/8,1/16,1/32
	4	Code RATE	7/8	1/2,2/3,3/4,5/6,7/8
	5	FFT Carrier	8K	2K,8K
	6	Bandwidth	6MHz	6,7,8,7-8MHz
	7	RF Level ADJ.	00dB	00~-30dB
Information	1	FW APP	5.1.2.x.x xx.xx.xx.xx	
Load Default	1	Yes,No		
Change Password	1	0000		