WATER FLOW SWITCH – INDICATING TYPE FLOW SWITCH MODEL : WFS-06/10/15/20/25

General

NK Instrumentshas indicating type, magnetically actuated flov switches are designed for positive detection of fluid flow throu your equipment. These are suitable for water, kerose lubricating oil of flow viscosity etc. These are available in sizes; i.e. ¼", 3/8", ½", ¾", & 1" BSP. Suitable size may be selectedfrom actual flow rate. Flow range covered is from 1 100 LPM. Fluid flow in the System is seen through transpar tube.

Technical Specifications

Max. System Pressure	:	10 Kg/cm2 (150 psi)
Temperature Range	:	8°C to 10° C
Electrical	:	Hermetically sealed reed switch.
Contact Rating	:	1Amp. 230 VAC SPST or SPDT

(Please take care of surge currents to avoid damage of Reed switch element. In such case please apply R.C. Network (Resistor & Capacitor).

Mounting Instructions

Dimension & Features

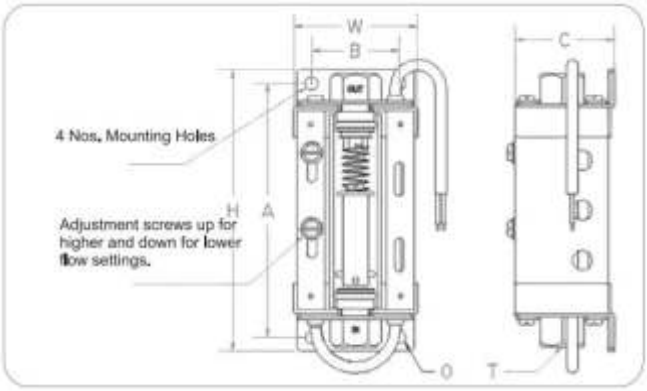

Model Available

No.	T BSP	A	B	O	H	W	C	Standard Flow Ranges Covered in LPM
WFS-06	1/4"	95	32	5.5	108	44	42.5	0.4-1.6, 0.44
WFS-10	3/8"	127	44	6.5	141	62.5	48.6	1-6 , 3-9
WFS-15	½"	163	46	6.5	177	70	61.5	3-9 , 7-21
WFS-20	¾"	171	56	6.5	189	76	69	10-30, 20-60, 30-90
WFS-25	1"	171	56	6.5	189	76	69	10-30, 20-60, 30-90

DO not use excessive forces while fixing nozzles/couplings. Use threads sealing for leak-tight joints. Do not hold switch in vice or wrench.
Do not exceed electrical rating of the read switch. Use auxiliary relay or contractor for higher current rating and extra number of contacts.
Do not exceed normal pressure rating of the switch for standard models. Consult manufacturer for higher system pressure.

Ordering Information

Basic Model *WFS– 10 S 1*

Line Size

06- ¼" BSP **10** – 3/8"BSP **15** – ½" BSP **20** – ¾" BSP **25** – 1" BSP
06N- ¼" NPT **10N** – 3/8"NPT **15N** – ½" NPT **20N** – ¾" NPT **25N** – 1" NPT

10 **10N**

M.O.C. of wetted parts

S Stainless Steel (SS 304)

S

Switch Type

1 SPST **2** SPDT

1

Continuous efforts for product development may necessitate changes in these details without notice

Authorised Dealer

NK Instruments Pvt. Ltd.
B-501/504, 5th floor, Raunak Arcade, Near THC Hospital, Gokhale Road, Naupada, Thane(W) 400602. Maharashtra INDIA
Telefax Nos.: 91-22-25301330 / 31 / 32
E-Mail: sales@nkinstruments.com
Web: http://www.nkinstruments.com
Skype: nitinkelkarskype
Gtalk: nkinstruments2006